MAXALTO

Tesaurus

STORAGE UNITS

2019

Antonio Citterio



Description

Tesaurus is a series of refined storage units. The shape underlines the high quality of the craftsmanship, starting with the curved wooden doors that open to reveal slightly protruding shelves, and a continuous profile that follows the volume's. Tesaurus is available in three different heights and widths, with two or four doors, with drawers and flap doors. The base is a die-cast aluminium structure borrowed from the Caratos chair design, while the element above is a top in black Marquinia, white Calacatta or Emperador marble. The interiors are made of refined maple frisé. The veneered oak or Chilean Tineo wood is made with a staggered checker motif with crossed grains. Parchment covering is a long and meticulous process and needs to be laid by specialised craftsmen who are trained to respect the natural material's characteristics. Over the passage of time the parchment surface matures so that, like a good wine, it will be transformed and acquire new sophisticated hues. Thanks to the complex hand crafted processes inherent in the manufacturing processes, the value of Tesaurus is immediately obvious. Each piece in this collection becomes a unique object, difficult to imitate and authentically exclusive. The family of storage units provides, only for the 90 cm wide element a variant that inspired by traditional large travel trunks, it takes the original Maxalto logo of the 70s and uses it as a pattern, repeated across the entire surface and finished with a glossy polyester varnish. The result is an iconic and highly refined piece.

Technical information

Internal frame
veneered multi-layered wood panel, veneered MDF wood fibre panel
Flap door compartment internal frame (RU180A)
reflective material
Upper top
marble (matt polyester finish)
Drawer frame
veneered multi-layered wood panel
Internal shelf
veneered MDF wood fibre panel
Flap door compartment shelf (RU180A)
toughened glass
Handle
die-cast zama
Base-frame
die-cast aluminium and extrusions
Adjustable feet
thermoplastic material

Technical drawings

RU90S

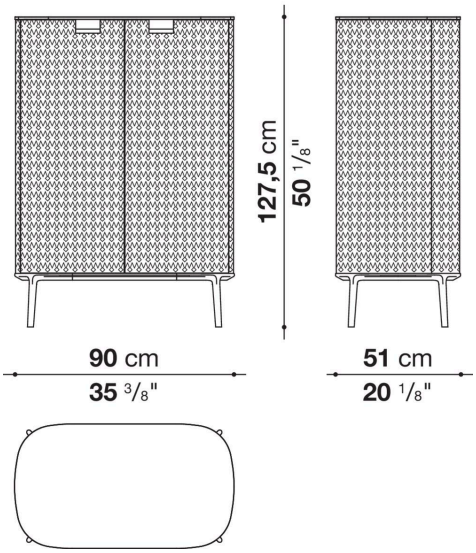

RU90A

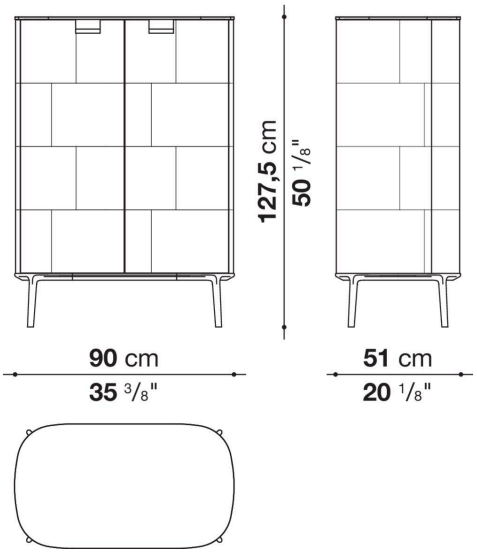

RU180A

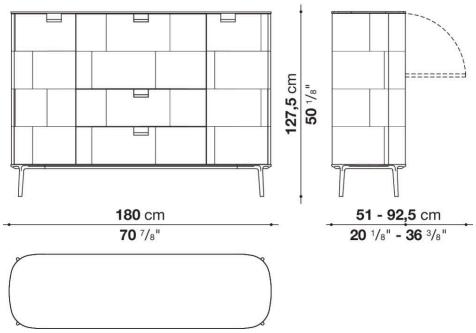

RU180BC

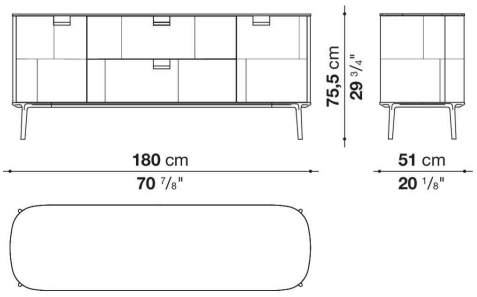

RU180BA

